THIS DRAWING IS REPRESENTATIVE OF THE APPARATUS PROPOSED.
IF THERE IS A DISCREPANCY BETWEEN THIS PRINT AND THE WRITTEN PROPOSAL,
THE SPECIFICATIONS WITHIN THE PROPOSAL PREVAIL.

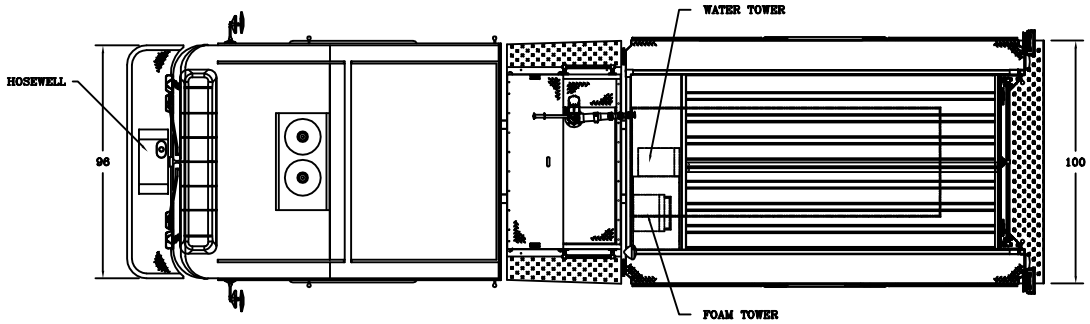

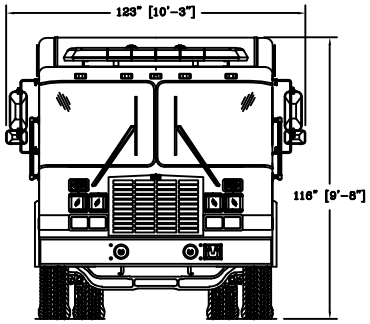

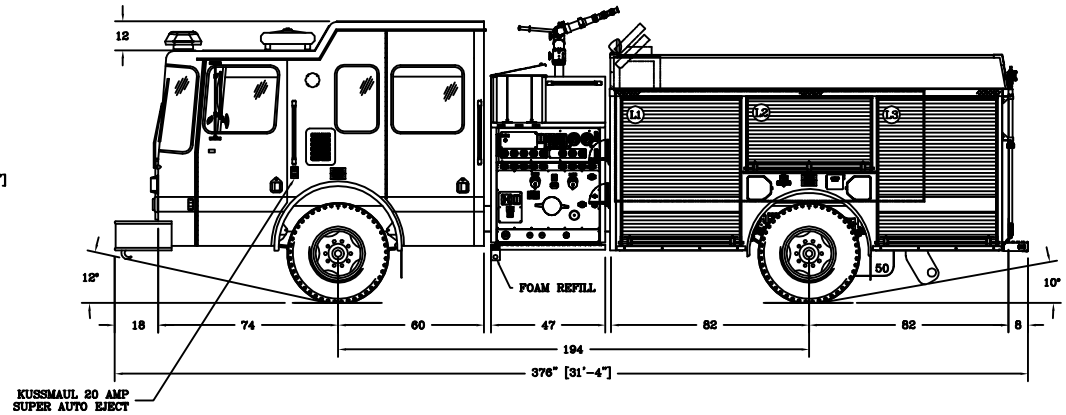

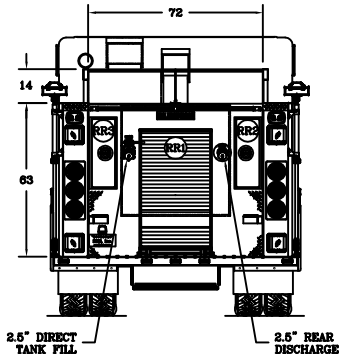

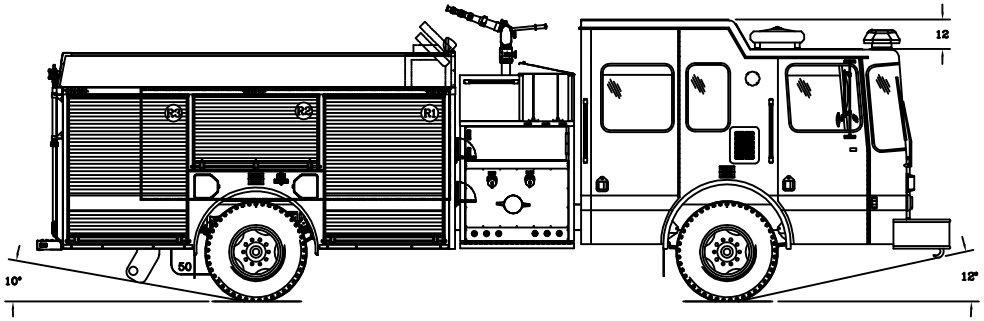

This drawing along with any changes made and initialed by both the "Fire Department" & HME, Inc. represents what will be constructed and supplied to the "Fire Department." Any changes to the contract specifications and drawing after today's date will be addresses via appropriate change order signed and approved by both the "Fire Department" & HME, Inc.

APPROVED BY: _____ TITLE: _____
FIRE DEPARTMENT

APPROVED BY: _____ TITLE: _____
HME, Incorporated

CREATED WITH AutoCAD®

LET	BY	DATE	REVISION
C	RLJ	24 APR '07	CLEAN ORDER RELEASE
A	RAM	28 NOV '06	ORIGINAL RELEASE

HME INCORPORATED
1950 BYRON CENTER AVE.
WYOMING, MI. 49509

THIS PRINT IS PROVIDED ON A RESTRICTED BASIS AND IS NOT TO BE USED IN ANY WAY DETRIMENTAL TO THE INTERESTS OF HME, INC.

NAME: HME STOCK

DRAWN	DATE	APPROVED	DRAWING FILE
R. Maleport	28 NOV '06	N/A	21096 HME STOCK

SIZE	NUMBER	SCALE
B	21096	NTS

SHEET 1 OF 1